Thank you for your interest in **onsemi** products.

Your technical document begins on the following pages.

Your Feedback is Important to Us!

Please take a moment to participate in our short survey.
At **onsemi**, we are dedicated to delivering technical content that best meets your needs.

Help Us Improve – Take the Survey

This survey is intended to collect your feedback, capture any issues you may encounter, and to provide improvements you would like to suggest.

We look forward to your feedback.

To learn more about **onsemi**, please visit our website at
www.onsemi.com

PNP Epitaxial Silicon Transistor

KSP92

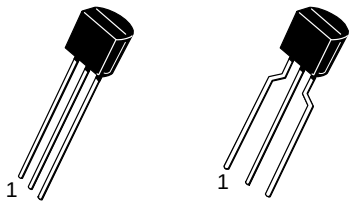

1. Emitter
2. Base
3. Collector

TO−92 3
4.825x4.76
CASE 135AN

TO−92 3
4.83x4.76
LEADFORMED
CASE 135AR

Description

High Voltage Transistor

Features

- These Devices are Pb−Free, Halogen Free/BFR Free, Beryllium Free and are RoHS Compliant

MARKING DIAGRAM

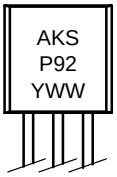

KSP92 = Specific Device Code
A = Assembly Site
WW = Work Week Number
Y = Year of Production

ABSOLUTE MAXIMUM RATINGS (T_a = 25°C, unless otherwise noted)

Symbol	Parameter	Value	Unit
V_{CBO}	Collector−Base Voltage	−300	V
V_{CEO}	Collector−Emitter Voltage	−300	V
V_{EBO}	Emitter−Base Voltage	−5	V
I_C	Collector Current	−500	mA
P_C	Collector Power Dissipation (T_a = 25°C)	625	mW
	Derate above 25°C	5	mW/°C
P_C	Collector Power Dissipation (T_C = 25°C)	1.5	W
	Derate above 25°C	12	mW/°C
T_J	Junction Temperature	150	°C
T_{STG}	Storage Temperature	−55~150	°C

Stresses exceeding those listed in the Maximum Ratings table may damage the device. If any of these limits are exceeded, device functionality should not be assumed, damage may occur and reliability may be affected.

ORDERING INFORMATION

Device	Package	Packing Method
KSP92BU	TO−92 3, CASE 135AN	10000 Units / Bulk Bag
KSP92TA	TO−92 3, CASE 135AR	2000 Units / Fan−Fold

ELECTRICAL CHARACTERISTICS (T_a = 25°C unless otherwise noted)

Symbol	Parameter	Test Condition	Min	Max	Unit
BV_{CBO}	Collector−Base Breakdown Voltage	I_C = −100 μA, I_E = 0	−300	–	V
BV_{CEO}	* Collector−Emitter Breakdown Voltage	I_C = −1 mA, I_B = 0	−300	–	V
BV_{EBO}	Emitter−Base Breakdown Voltage	I_E = −100 μA, I_C = 0	−5	–	V
I_{CBO}	Collector Cur−off Current	V_{CB} = −200 V, I_E = 0	–	−0.25	μA
I_{EBO}	Emitter Cut−off Current	V_{EB} = −3 V, I_C = 0	–	−0.10	μA
h_{FE}	* DC Current Gain	V_{CE} = −10 V, I_C = −1 mA V_{CE} = −10 V, I_C = −10 mA V_{CE} = −10 V, I_C = −30 mA	25 40 25	– – –	
V_{CE} (sat)	*Collector−Emitter Saturation Voltage	I_C= −20 mA, I_B= −2 mA	–	−0.50	V
V_{BE} (sat)	* Base−Emitter Saturation Voltage	I_C = −20 mA, I_B = −2 mA	–	−0.90	V
f_T	Current Gain Bandwidth Product	V_{CE} = −20 V, I_C = −10 mA, f = 100 MHz	50	–	MHz
C_{ob}	Output Capacitance	V_{CB} = −20 V, I_E = 0, f = 1 MHz	–	6	pF

Product parametric performance is indicated in the Electrical Characteristics for the listed test conditions, unless otherwise noted. Product performance may not be indicated by the Electrical Characteristics if operated under different conditions.
*Pulse Test: PW ≤ 300 μs, Duty Cycle ≤ 2%.

TYPICAL PERFORMANCE CHARACTERISTICS

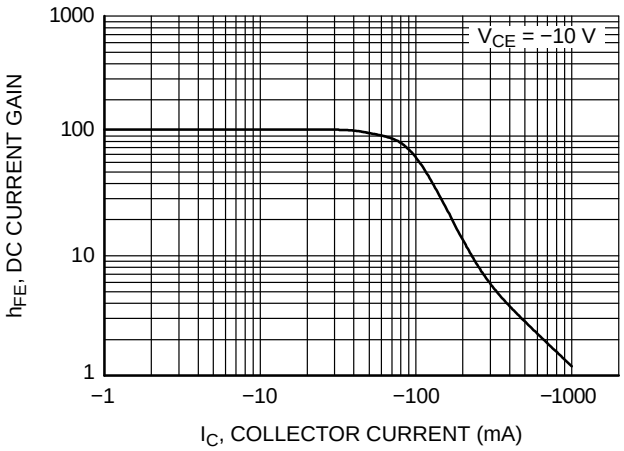

Figure 1. DC Current Gain

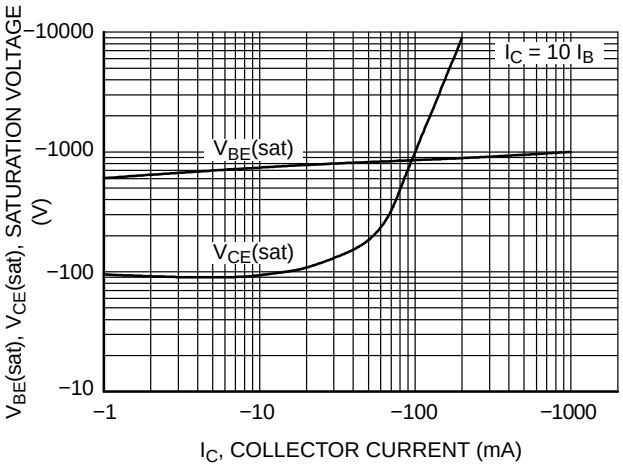

Figure 2. Saturation Voltage

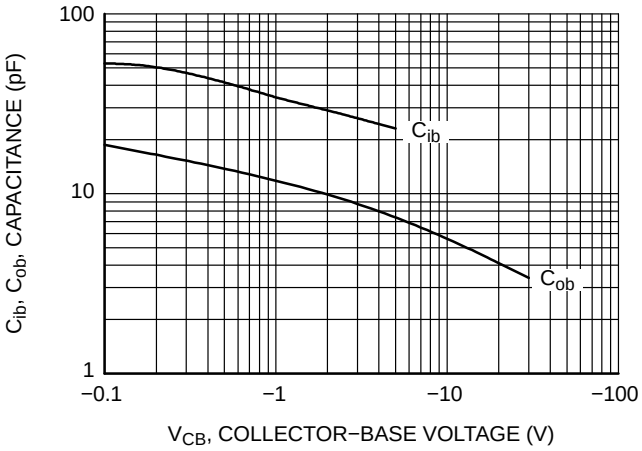

Figure 3. Capacitance

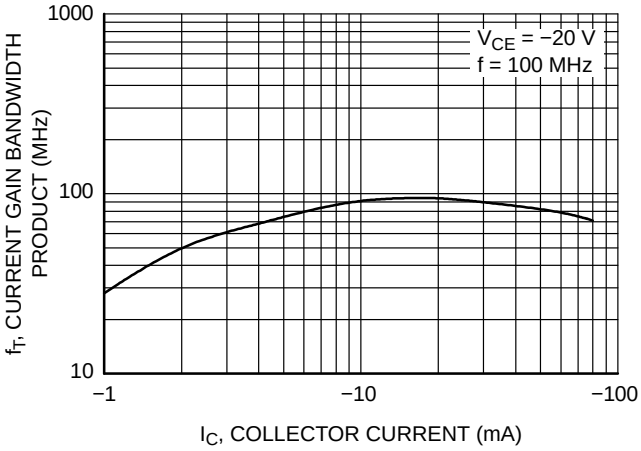

Figure 4. Current Gain Bandwidth Product

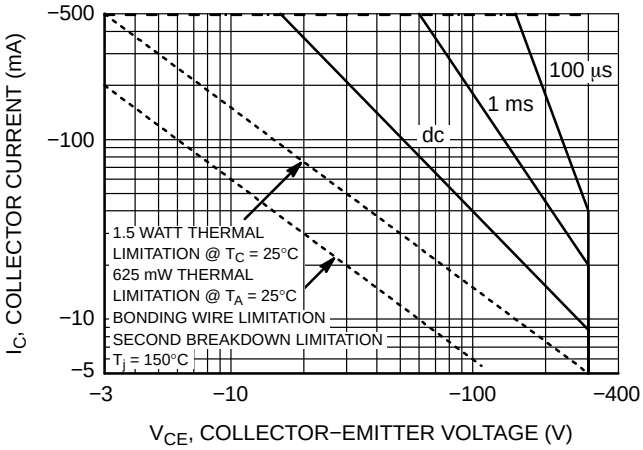

Figure 5. Active−Regio Safe Operating Area

TO−92 3 4.825x4.76
CASE 135AN
ISSUE O

DATE 31 JUL 2016

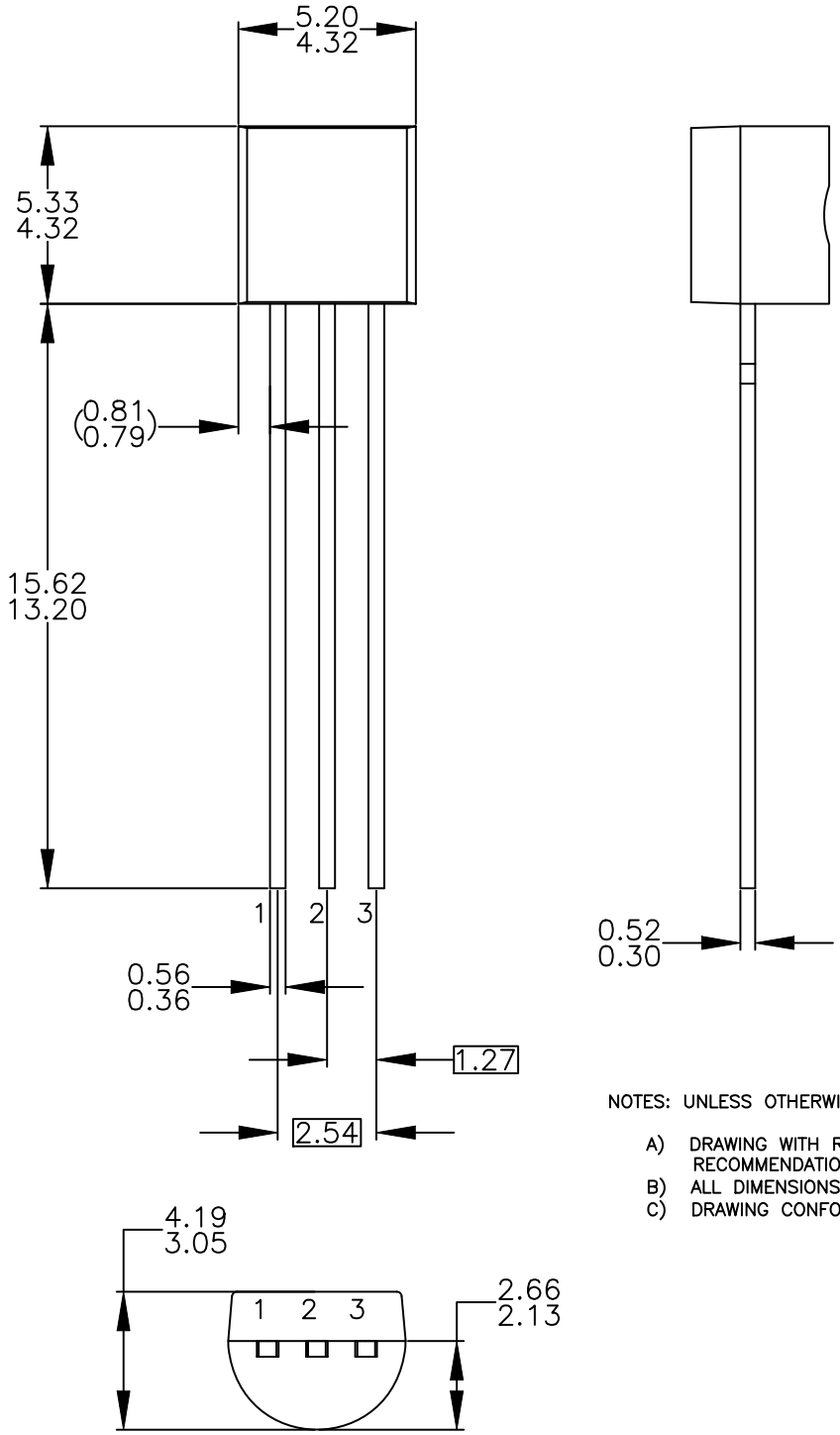

NOTES: UNLESS OTHERWISE SPECIFIED

A) DRAWING WITH REFERENCE TO JEDEC TO−92 RECOMMENDATIONS.
B) ALL DIMENSIONS ARE IN MILLIMETERS.
C) DRAWING CONFORMS TO ASME Y14.5M−2009.

DOCUMENT NUMBER:	**98AON13880G**	Electronic versions are uncontrolled except when accessed directly from the Document Repository. Printed versions are uncontrolled except when stamped "CONTROLLED COPY" in red.
DESCRIPTION:	**TO−92 3 4.825X4.76**	**PAGE 1 OF 1**

TO−92 3 4.83x4.76 LEADFORMED
CASE 135AR
ISSUE O

DATE 30 SEP 2016

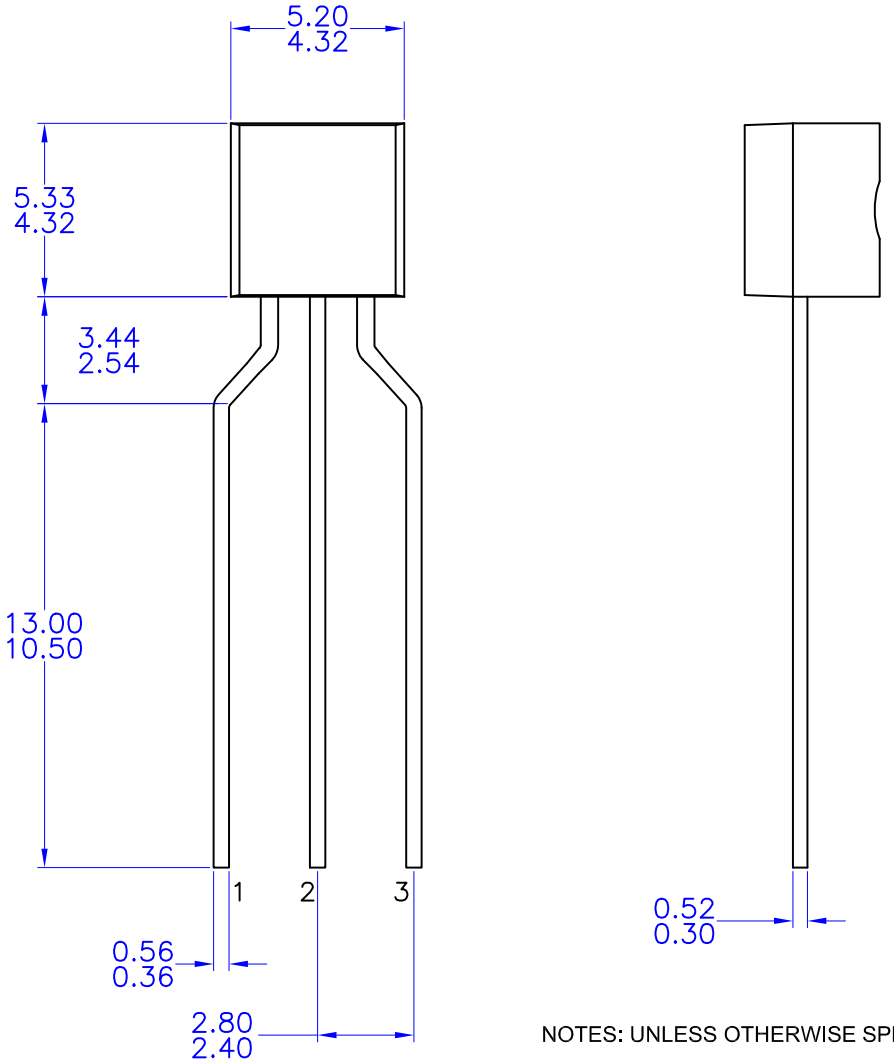

NOTES: UNLESS OTHERWISE SPECIFIED

A) DRAWING WITH REFERENCE TO JEDEC TO-92 RECOMMENDATIONS.
B) ALL DIMENSIONS ARE IN MILLIMETERS.
C) DRAWING CONFORMS TO ASME Y14.5M-1994

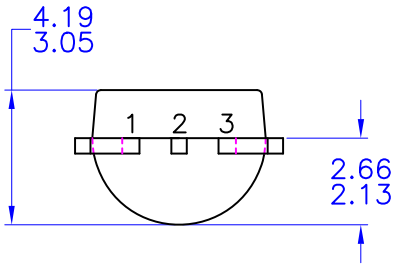

DOCUMENT NUMBER:	**98AON13879G**	Electronic versions are uncontrolled except when accessed directly from the Document Repository. Printed versions are uncontrolled except when stamped "CONTROLLED COPY" in red.
DESCRIPTION:	**TO−92 3 4.83X4.76 LEADFORMED**	**PAGE 1 OF 1**

ADDITIONAL INFORMATION

TECHNICAL PUBLICATIONS:
Technical Library: www.onsemi.com/design/resources/technical−documentation
onsemi Website: www.onsemi.com

ONLINE SUPPORT: www.onsemi.com/support
For additional information, please contact your local Sales Representative at
www.onsemi.com/support/sales