1.0 A Ultra Fast Recovery Rectifier

ES1A-ES1D

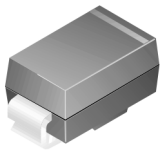

SMA
CASE 403AE
(COLOR BAND DENOTES CATHODE)

Features

- For Surface Mount Applications
- Glass Passivated Junction
- Low Profile Package
- Easy Pick and Place
- Built−in Strain Relief
- Superfast Recovery Times for High Efficiency
- This Device is Pb−Free and is RoHS Compliant

Applications

- This Product is General Usage and Suitable for Many Different Applications

MARKING DIAGRAM

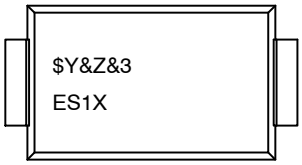

$Y	= ON Semiconductor Logo
&Z	= Assembly Plant Code
&3	= Data Code (Year & Week)
ES1X	= Specific Device Code
X	= A/B/C/D

ORDERING INFORMATION

See detailed ordering and shipping information on page 2 of this data sheet.

ABSOLUTE MAXIMUM RATINGS T_A = 25°C Unless Otherwise Noted

Symbol	Parameter	Value				Units
		1A	1B	1C	1D	
V_{RRM}	Maximum Repetitive Reverse Voltage	50	100	150	200	V
$I_{F(AV)}$	Average Rectified Forward Current, @ T_A = 120°C	1.0				A
I_{FSM}	Non−repetitive Peak Forward Surge Current 8.3 ms Single Half−Sine−Wave	30				A
T_{stg}	Storage Temperature Range	−50 to +150				°C
T_{Jm}	Operating Junction Temperature	−50 to +150				°C

Stresses exceeding those listed in the Maximum Ratings table may damage the device. If any of these limits are exceeded, device functionality should not be assumed, damage may occur and reliability may be affected.

THERMAL CHARACTERISTICS

Symbol	Parameter	Value	Units
P_D	Power Dissipation	1.47	W
$R_{\theta JA}$	Thermal Resistance, Junction to Ambient*	85	°C/W
$R_{\theta JL}$	Thermal Resistance, Junction to Lead*	35	°C/W

*Device mounted on FR−4 PCB 0.013 mm.

ELECTRICAL CHARACTERISTICS T_J = 25°C Unless Otherwise Noted

Symbol	Parameter	Device				Units
		1A	1B	1C	1D	
V_F	Forward Voltage @ 1.0 A	0.92				V
t_{rr}	Reverse Recovery Time I_F = 0.5 A, I_R = 1.0 A, I_{RR} = 0.25 A	15				ns
I_R	Reverse Current @ rated V_R T_A = 25°C T_A = 100°C	 5.0 100				μA
C_T	Total Capacitance V_R = 4.0 V, f = 1.0 MHz	7.0				pF

Product parametric performance is indicated in the Electrical Characteristics for the listed test conditions, unless otherwise noted. Product performance may not be indicated by the Electrical Characteristics if operated under different conditions.

PACKAGE MARKING AND ORDERING INFORMATION TBD

Device Marking	Device	Package	Quantity†
ES1A	ES1A	SMA	7500 / Tape & Reel
ES1B	ES1B	SMA	7500 / Tape & Reel
ES1C	ES1C	SMA	7500 / Tape & Reel
ES1D	ES1D	SMA	7500 / Tape & Reel

†For information on tape and reel specifications, including part orientation and tape sizes, please refer to our Tape and Reel Packaging Specifications Brochure, BRD8011/D.

TYPICAL CHARACTERISTICS

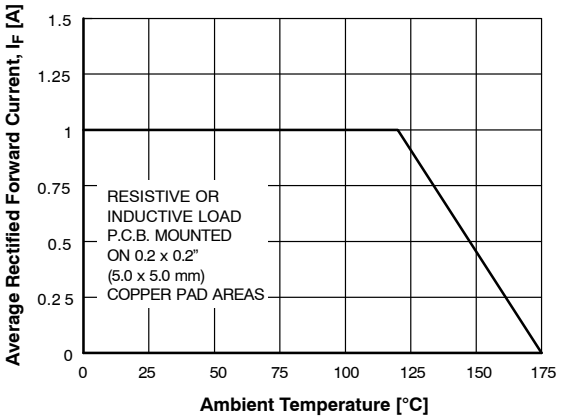

Figure 1. Forward Current Derating Curve

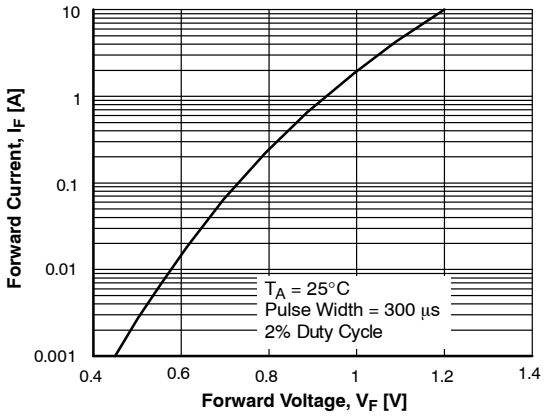

Figure 2. Forward Voltage Characteristics

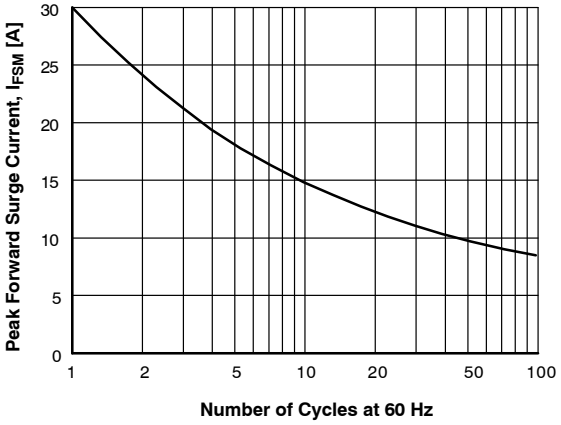

Figure 3. Non−Repetitive Surge Current

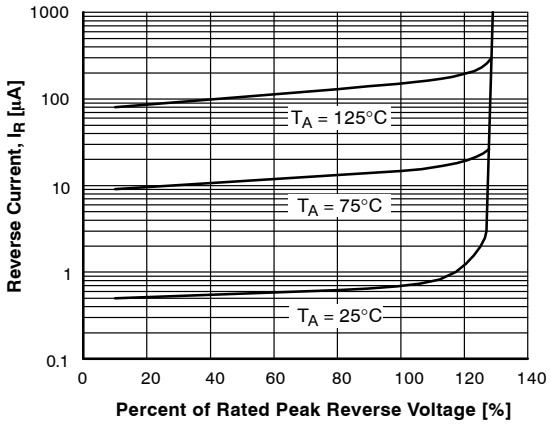

Figure 4. Reverse Current vs Reverse Voltage

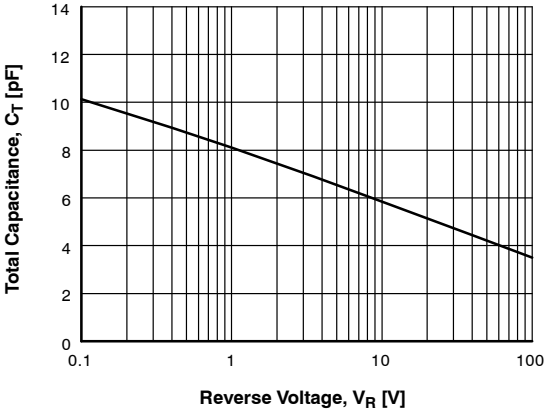

Figure 5. Total Capacitance

TYPICAL CHARACTERISTICS (continued)

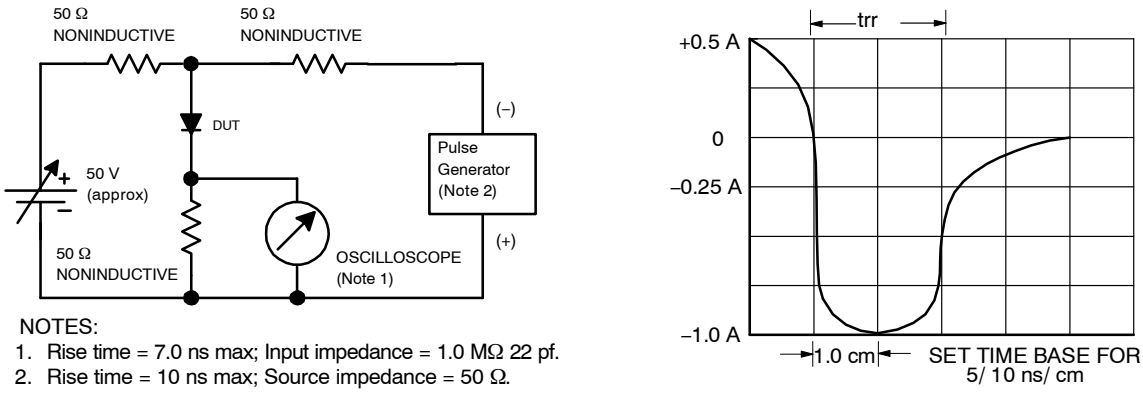

NOTES:
1. Rise time = 7.0 ns max; Input impedance = 1.0 MΩ 22 pf.
2. Rise time = 10 ns max; Source impedance = 50 Ω.

Figure 6. Reverse Recovery Time Characterstic and Test Circuit Diagram

SMA
CASE 403AE
ISSUE O

DATE 31 AUG 2016

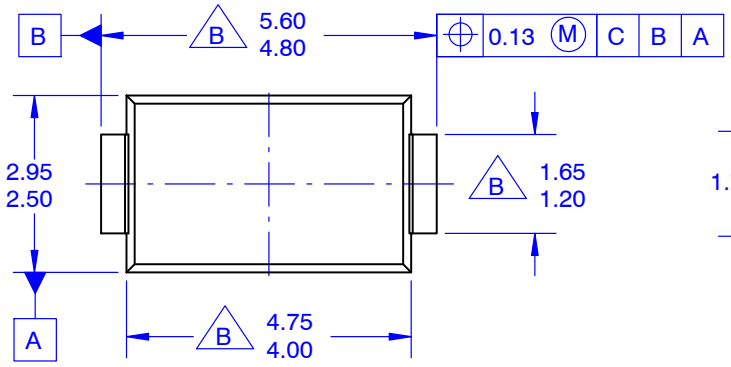

TOP VIEW

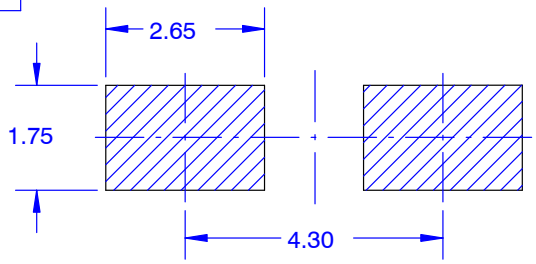

LAND PATTERN RECOMMENDATION

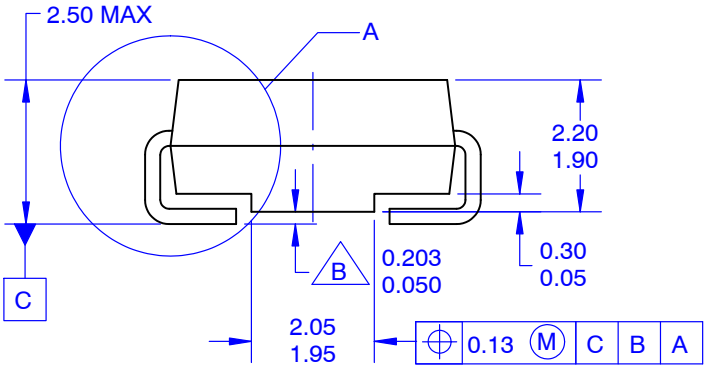

SIDE VIEW

NOTES:

A. EXCEPT WHERE NOTED, CONFORMS TO JEDEC DO214 VARIATION AC.
B. DOES NOT COMPLY JEDEC STANDARD VALUE.
C. ALL DIMENSIONS ARE IN MILLIMETERS.
D. DIMENSIONS ARE EXCLUSIVE OF BURRS, MOLD FLASH AND TIE BAR PROTRUSIONS.
E. DIMENSIONS AND TOLERANCE AS PER ASME Y14.5–2009.
E. LAND PATTERN STD. DIOM5025X231M

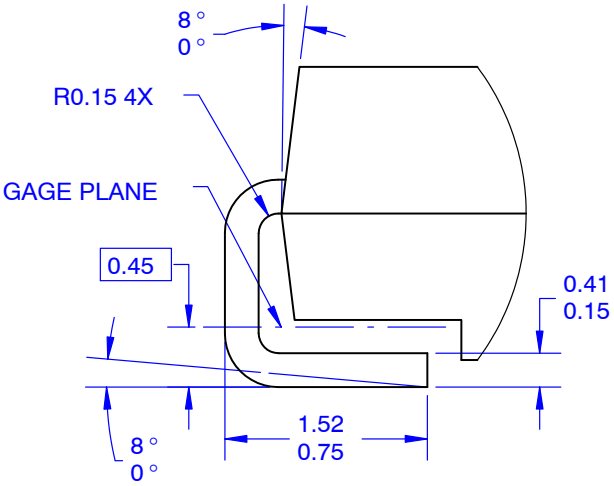

DETAIL A
SCALE 20 : 1

DOCUMENT NUMBER:	**98AON13440G**	Electronic versions are uncontrolled except when accessed directly from the Document Repository. Printed versions are uncontrolled except when stamped "CONTROLLED COPY" in red.
DESCRIPTION:	**SMA**	**PAGE 1 OF 1**

ADDITIONAL INFORMATION

TECHNICAL PUBLICATIONS:
Technical Library: www.onsemi.com/design/resources/technical−documentation
onsemi Website: www.onsemi.com

ONLINE SUPPORT: www.onsemi.com/support
For additional information, please contact your local Sales Representative at
www.onsemi.com/support/sales