AHPM15−CEA
CASE 100DD
ISSUE B

DATE 28 SEP 2022

NOTES:
1. DIMENSIONING AND TOLERANCING PER. ASME Y14.5M, 2009.
2. CONTROLLING DIMENSION: MILLIMETERS
3. DIMENSIONS D & E DO NOT INCLUDE MOLD PROTRUSIONS
4. DIMENSIONS b,b1,b2 DO NOT INCLUDE DAMBAR REMAIN.
5. MARKING AREA.
6. E4 IS FROM INNER LEAD TIP TO INNER LEAD TIP DISTANCE.

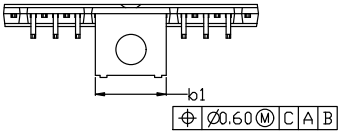

END VIEW

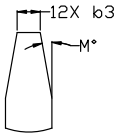

DETAIL B

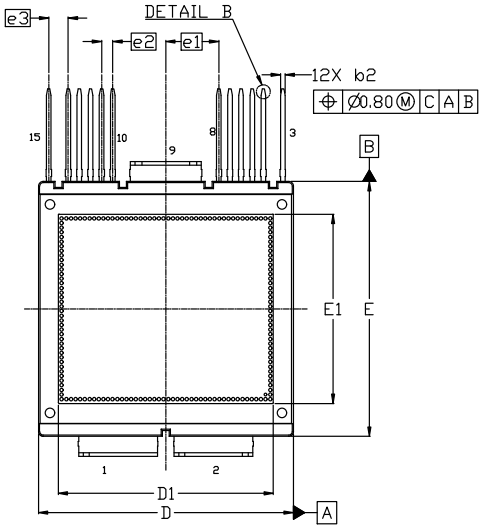

TOP VIEW

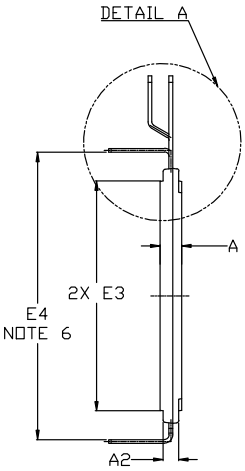

SIDE VIEW

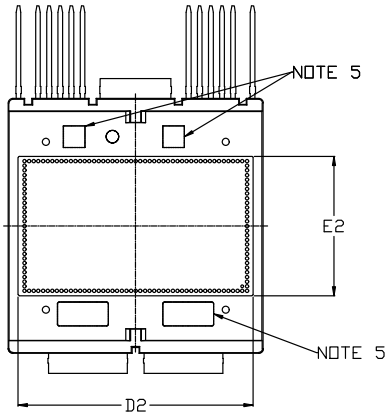

BOTTOM VIEW

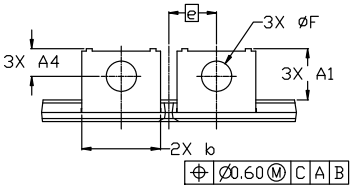

END VIEW

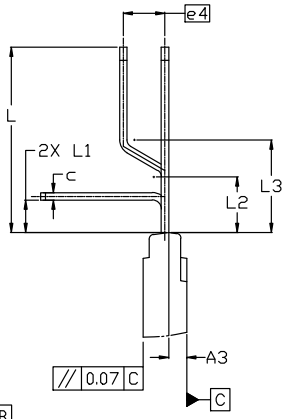

DETAIL A

DIM	MILLIMETERS MIN.	NOM.	MAX.
A	4.65	4.70	4.75
A1	10.75	11.05	11.35
A2	3.20	3.40	3.60
A3	1.60	1.95	2.30
A4	5.70	6.00	6.30
b	16.90	17.00	17.10
b1	15.20	15.30	15.40
b2	0.90	1.00	1.10
b3	0.50 REF		
c	0.70	0.80	0.90
D	54.80	55.00	55.20
D1	46.20	46.50	46.80
D2	50.70	51.00	51.30

DIM	MILLIMETERS MIN.	NOM.	MAX.
E	54.80	55.00	55.20
E1	40.50	40.80	41.10
E2	29.80	30.10	30.40
E3	49.40	49.60	49.80
E4	61.75	62.00	62.25
e	10.30 BSC		
e1	11.45 BSC		
e2	2.40 BSC		
e3	4.20 BSC		
e4	4.50 BSC		
F	6.45	6.50	6.55
L	19.60	20.00	20.40
L1	3.10	3.50	3.90
L2	5.70	6.00	6.30
L3	9.70	10.00	10.30
M	10° REF		

GENERIC MARKING DIAGRAM*

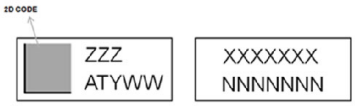

ZZZ = Assembly Lot Code
AT = Assembly & Test Site Code
Y = Year
WW = Work Week
XXXX = Specific Device Code
NNN = Serial Number

*This information is generic. Please refer to device data sheet for actual part marking. Pb−Free indicator, “G” or microdot “▪”, may or may not be present. Some products may not follow the Generic Marking.

DOCUMENT NUMBER:	**98AON86580G**	Electronic versions are uncontrolled except when accessed directly from the Document Repository. Printed versions are uncontrolled except when stamped “CONTROLLED COPY” in red.
DESCRIPTION:	**AHPM15−CEA**	**PAGE 1 OF 1**

onsemi and onsemi are trademarks of Semiconductor Components Industries, LLC dba **onsemi** or its subsidiaries in the United States and/or other countries. **onsemi** reserves the right to make changes without further notice to any products herein. **onsemi** makes no warranty, representation or guarantee regarding the suitability of its products for any particular purpose, nor does **onsemi** assume any liability arising out of the application or use of any product or circuit, and specifically disclaims any and all liability, including without limitation special, consequential or incidental damages. **onsemi** does not convey any license under its patent rights nor the rights of others.